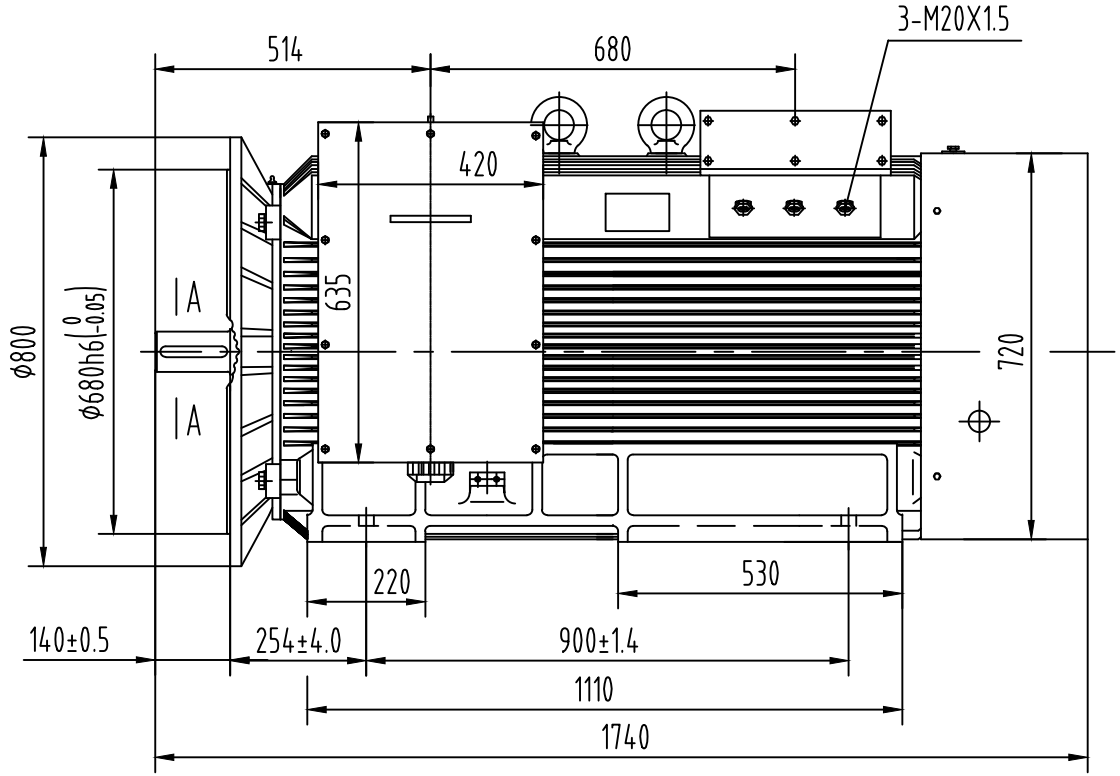

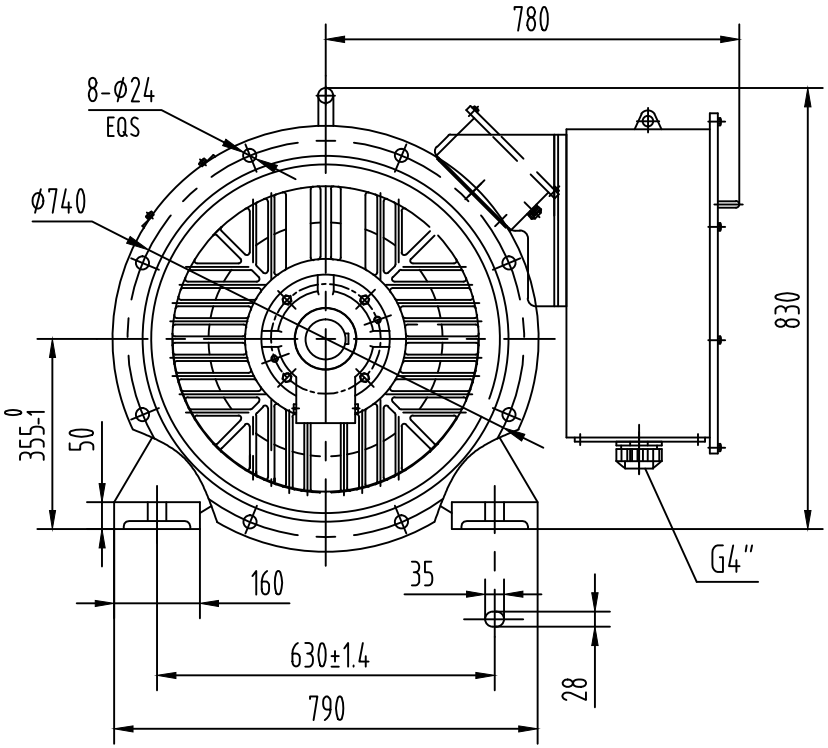

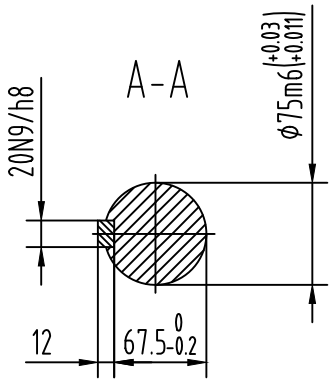

Mark	No.	Zone	Changed file No.	Signatuce	Data

Design			Standard		
Check					
Auditing					
Technics			Approvil		

Sign				Weight	Scale
					1:14
Total page			page No.		

OUTLINE

OHT4-355F0-02P 3~7kV B35

Wuxi OMEC LTD.